Brake Caliper DH 035 FHA

spring activated – hydraulically released

RINGSPANN®

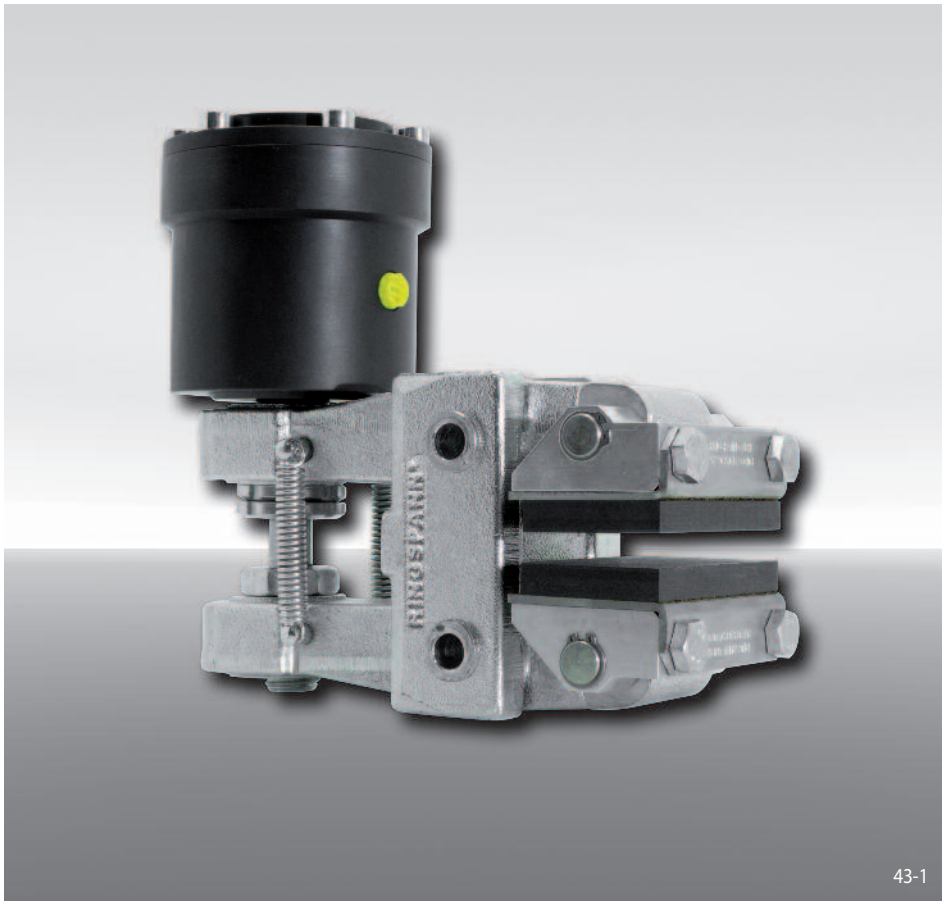

43-1

Features	Code
Brake Caliper	D
Mounting to the machine at right angles to the brake disc	H
Frame size 030	035
Spring activated	F
Hydraulically released	H
Automatic adjustment to accommodate friction block wear	A
Thruster 260	260
Thruster mounted right or left available	R L
Thickness of brake disc 12,5 mm or 25 mm	12 25

Example for ordering

Brake Caliper DH 035 FHA, thruster 260, thruster mounted right, thickness of brake disc 12,5 mm:

DH 035 FHA - 260 R - 12

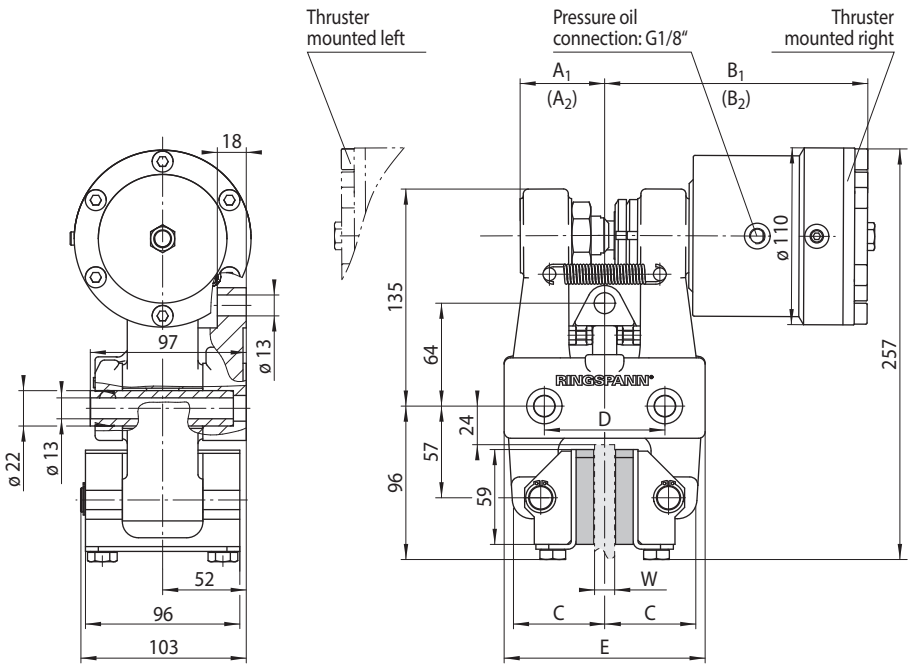

Thickness of brake disc W mm	A_1 mm	(A_2) mm	B_1 mm	(B_2) mm	C mm	D mm	E mm
12,5	54	(68)	164	(174)	57	75	125
25	59	(73)	171	(181)	63	84	131

Values in brackets resulting with maximum friction block wear.

43-2

Technical Data

	Brake Caliper DH 035 FHA with thruster 260
Brake disc diameter mm	Braking torque Nm
300	1500
355	1850
430	2350
520	3000
630	3600
710	4100
800	4700
Clamping force	16000 N
Oil pressure	min. 55 bar max. 120 bar
Oil volume	max. 6 cm^3
Weight	14,1 kg

The braking torques shown in the table are based on a theoretical friction coefficient of 0,4.